INSTRUCTION MANUAL

QUIMBOA COFFEE GRINDER

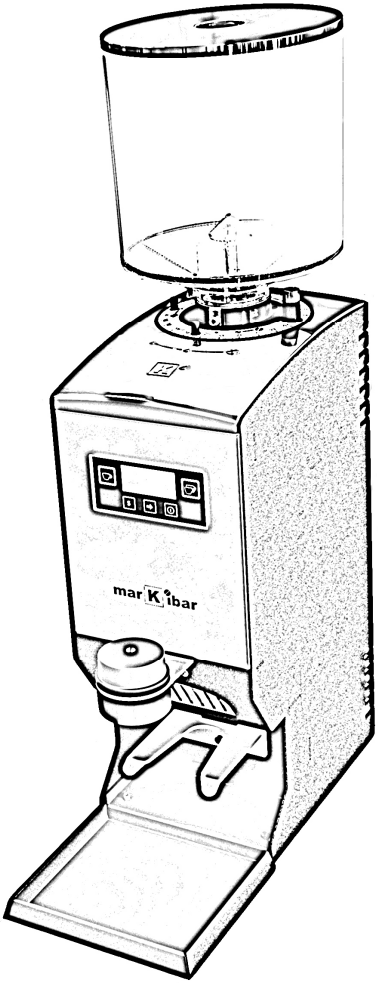

markibar

automaticgrinders

Dear customer:

The QUIMBOA automatic coffee grinder is a completely automatic professional espresso coffee grinder that provides you with just the right amount of freshly ground coffee quickly and conveniently for the perfect cup of coffee.

This product has been designed using the latest technology and based on more than 20 years of experience in the espresso coffee market. The result is a high-quality product with multiple features that we hope will more than meet your needs.

Be sure to read and follow the instructions and suggestions found in this manual to fully and safely benefit from the features of this product. In the case of a malfunction, contact the manufacturer or the store where you bought the grinder.

Markibar reserves the right to add any future improvements it deems appropriate as the result of the company's continuing research.

TABLE OF CONTENTS

1.- Safety instructions.
2.- Technical information.
3.- Description.
4.- Safety features of the grinder.
5.- Installation and set up.
6.- Display.
7.- Problem solving.
8.- Cleaning.
9.- Maintenance.
10.- Declaration of conformity.
11.- Warranty conditions.
12.- Appendix I. Filter-holder identification.

1.- Safety instructions.

Please read and pay close attention to the following safety instructions. The failure to follow these instructions may result in a malfunction or damage to the machine.

1.1- Symbols.

1.1-1. Safety instructions.

Risk of an accident if this note is not followed.

1.1-2. General instructions.

The machine may be damaged or proper operation is no longer guaranteed if this instruction is not followed.

1.2- Safety instructions.

- When unpacking the machine, check to see that the voltage of your electrical system matches that shown by the manufacturer on the rating label. Never use the machine in wet or damp areas.
- The plastic bags used for packing may pose a safety hazard. Keep them out of the reach of children.
- Unplug the equipment before performing any maintenance or cleaning tasks.
- Never operate the grinder if the electrical cord is in poor condition. Periodically inspect the electrical cord, the plug, etc. for any possible damage.
- Any repair should be performed by Authorized Service Technicians.
- For best results, the maximum operating cycle should not exceed 5 seconds of grinding and 10 seconds of

stoppage. After 30 minutes of continuous operation, allow the motor to cool before using it again.

- Do no modify or alter the machine in any way. The Manufacturer assumes no responsibility for damage caused by the failure to follow these instructions.
- Children do not appreciate the danger involved with using electrical equipment. For this reason, they should never be allowed to operate electrical equipment such as this grinder without proper supervision.
- Do not insert objects in the ventilation slots on the grinder.
- *The grinder must be installed indoors, away from areas where it may be splashed with water, sprayed with water from cleaning operations, etc.*
- *Never submerge the grinder in water or operate it with wet hands.*

1.3- Using the grinder.

This machine is designed exclusively to grind coffee beans. Do not use it to grind other products or objects. NEVER put GROUND COFFEE in the HOPPER.

1.4- Operator requirements.

This machine requires no special knowledge for its use. Simply read and understand the instructions found in this manual and follow the recommendations.

2.- Technical information.

CHARACTERISTICS	DATA
VOLTAGE / FREQUENCY	230 V 50 Hz
RATED POWER	525 W
ROTATION	1350 rpm
OVERLOAD FUSE	10 A, Type T
Maximum permitted operating time	34 % on, 66% off
HEIGHT H	648 mm
WIDTH W1/W2	164 mm / 180 mm Ø Bean hopper.
DEPTH L	380 mm
WEIGHT	15 kg
BEAN HOPPER CAPACITY	1.5 kg
GRINDING BURRS	Ø64
PRODUCTION KG/HOUR	6 kg

3.- Description.

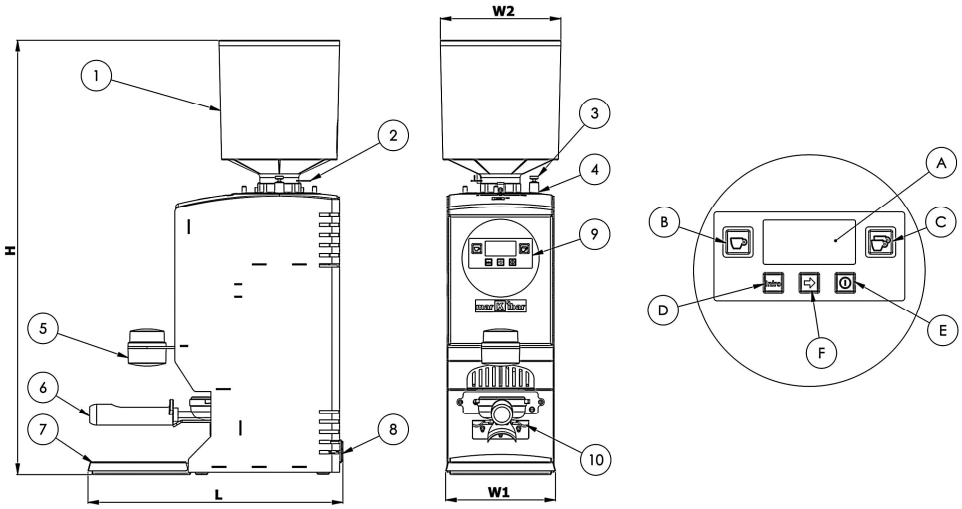

1.- Bean hopper
2.- Hopper closing device.
3.- Grinding level lock.
4.- Grinding level setting lever.
5.- Press tamp.
6.- Filter-holder.
7.- Coffee grounds tray.
8.- Fuse.
9.- Keypad and display.
10.- Filter-holder rest.
A.- Display.
B.- 1 Cup button.
C.- 2 Cup button.
D.- Intro button.
E.- On/Off button.
F.- Advance button.

4.- Safety devices.

The grinder motor is protected by a thermal safety device that cuts off the electricity to the motor if it becomes overheated. This device is automatically reset when the machine cools.

The user cannot perform any operation on this device. If the device is repeatedly activated, please consult our Technical Assistance Service, as the motor may be damaged.

5.- Installation and set up.

Each grinder is factory tested with coffee beans to make sure that it works properly. For this reason, you may find ground coffee in the grinder's mechanisms.

5.1.- Grinder location.

Place the grinder on a solid, dry surface next to the coffee machine.

Never operate the grinder in wet or damp places.

5.2. - Installation and set up.

Open the clamp which sets the bean hopper, and place it as shown in the picture.

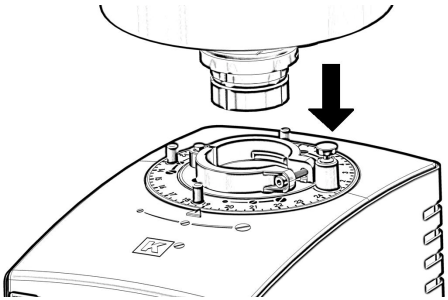

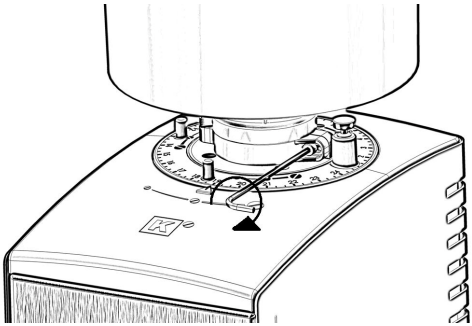

For compliance with safety requirements, tighten slightly with a tool the screw that holds the hopper in place. See picture.

Insert the coffee grounds tray as shown in the illustration.

The grinder has two Press tamps, Ø55 (bottom side) and Ø50 (upper side). Attach on the bottom the Press tamp that best matches the Filter-holder of your coffee machine

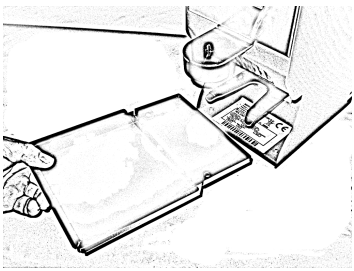

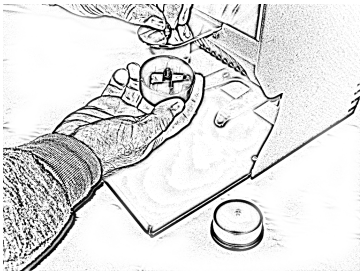

To connect the grinder to the power supply, do the following:

- The grinder's electrical connection must be properly protected by current limiting circuit breakers, a differential switch and a ground connection, according to current safety regulations.
- Make sure that the voltage and frequency of your establishment match those indicated on the grinder's rating plate.
- Plug the grinder into the electrical socket. The display will show the message " 1 c ".
- Open the hopper lid and pour the coffee beans into the hopper. NEVER put GROUND COFFEE in the hopper.
- Make sure that the hopper closing device (Pos. 2) is open.
- Select the desired coffee dose, pressing the corresponding button:
- Buttons B and C allow you to select one or two cups.
- The display will show the selected dose " 1 c " or " 2 c ".
- Insert the filter-holder from your coffee machine in the filter-holder rest (Pos. 10) as far as it will go.
- The corresponding dose is deposited in the filter-holder.
- Compact this dose using the press tamp (Pos. 5) to level off the ground coffee before placing it in your coffee machine.
- The grinder automatically grinds the corresponding dose.
- Use the ON / OFF button (Pos. E) to turn on and off the grinder. In the Off position, the grinder remains in stand-by mode.

5.3.- Basic settings.

5.3.1.- Grinding fineness setting.

The grinder is adjusted in the factory to be used with espresso coffee. It simply needs a bit of fine tuning to adapt it to the characteristics of the coffee used in your establishment. Grind enough coffee to fill your filter-holder with what you consider to be a normal dose and brew a cup of coffee with your coffee machine. If the result is unsatisfactory, modify the grinding level as follows:

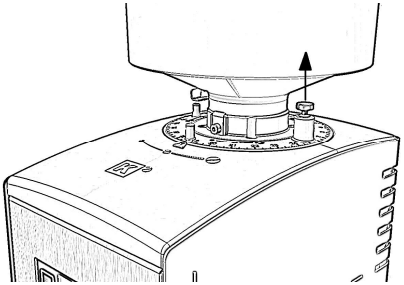

- Pull the grinding level lock (Pos. 3) up with one hand and turn the grinding level lever (Pos. 4) with the other. Turn it clockwise for finer ground coffee and counterclockwise for coarser coffee.
- Release the lock to set the grinding position.
- Brew more coffee for additional tests, repeating the steps above until achieving optimal results in the cup.

5.3.2.- Coffee dosage setting.

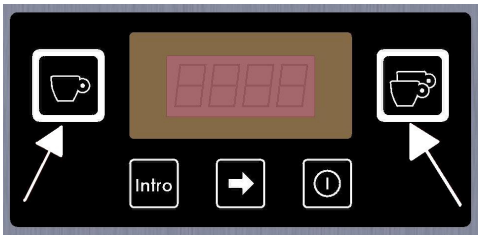

The grinder is set at the factory for a grinding time of 2 seconds for 1 cup of coffee and 3.5 seconds for 2 cups of coffee. If the dose obtained is not what you want in your coffee machine, modify the dose as follows:

- Press the 1 cup button (Pos. B) for 1.5 seconds until "d c1" appears on screen. Release the button and the current dose will appear on screen.
- Press the advance button ⇨ (Pos. F) until reaching the desired value.
- Press the 1 cup button again to confirm the new dose.
- Perform the same operation with the 2 cup button.

5.3.3.- Filter-holder detection system setting.

The grinder has several systems for selecting 1- or 2-cup doses, which may be programmed by your Technical Assistance Service:

- Key selection, 1 Cup: When the filter-holder is inserted, it receives the dose for 1 cup of coffee. To obtain a dose for 2 cups of coffee, press the 2c button before inserting the filter-holder. (Factory programmed setting.)

- Key selection, 2 Cups: Without pressing any button the filter-holder receives the dose for 2 cups of coffee. Press the 1c button before inserting the filter-holder for the single dose.
- Key selection, last service. Without pressing any key the filter-holder receives the same dose as in the last service.
- Dose selection by pressing filter-holder single or double click:
    - Press filter-holder once (single click): One cup of coffee.
    - Press filter-holder, release and press again (double click): Two cups of coffee.
- Automatic filter-holder identification (Only for the QUIMBOA CLASS A model). This patented system automatically detects 1-cup or 2-cup filter-holders.
- For the system to work, a tag or identifier must be fixed to the 2-cup filter-holder: the grinder distinguishes between a filter-holder with this tag (and provides the dose for two cups of coffee) and filter-holder without tag (for which it provides the dose for one cups of coffee), with no need for any action on the part of the operator. (See Appendix I).

- 6.- Counter.

The QUIMBOA grinder has a display system that will show the number of coffees (both 1-cup and 2-cup) that have been prepared so far at any time. To use this function, proceed as follows:

- Press the Programming button (Intro. [Enter] Pos. D). The message "cont" (counter) will be shown on the display.

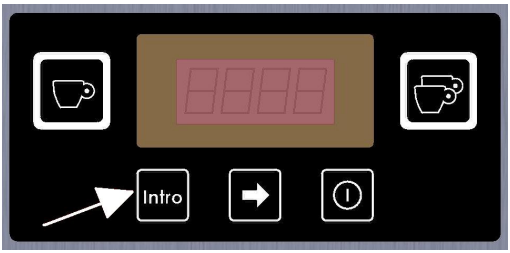

- After 1.5 seconds, you will see this message " n 1 c.", meaning the number of 1-cup coffees prepared.
- The number of coffees is then displayed in a series of display screens, for example; 43,500 coffees will be shown in the following manner:
  - The first display shows the units: " .500 ".
  - The second display shows the thousands: " 0.043. "
- Pressing the button again, the message " n 2 c." will be shown, and again, the units and thousands of 2-cup coffees prepared will be displayed successively.

7.- Problem solving.

PROBLEM	CAUSE	SOLUTION
The grinder is off. Display is off.	The differential switch or current limiting circuit breaker has been tripped.	Reset the installation's protective device.
	The electrical cord is not connected.	Plug the electrical cord into the socket.
	Blown fuse in the equipment.	Check the fuse and replace if necessary.
The grinder is connected but it doesn't turn, so it doesn't grind.	Grinding level too fine.	Set a coarser grinding level. Grind some coffee and gradually return to the desired level.
	A foreign object prevents the machine from grinding.	Proceed as in the previous section. Contact the Technical Assistance Service if the device does not turn freely.
The grinder does not start. Display is on.	Overheating due to excessive motor use.	Wait for the device to cool down and for the thermal protective device to be automatically reset.
The grinder starts and turns, but does not make coffee.	The bean hopper is jammed or the inlet hopper is closed.	Check both the inlet hopper and the bean hopper.
The device grinds very slowly.	The grinding burrs are worn out.	Replace the burrs.

In case of other anomalies or continuous malfunction contact TAS (Technical Assistance Service).

8.- Cleaning.

Before proceeding to clean any grinder parts, disconnect from the power supply by unplugging the electrical cord from the back of the grinder.

8.1.- Cleaning the bean hopper.

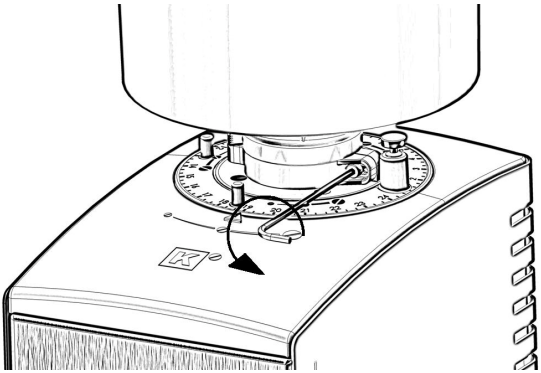

Close the inlet hopper and loosen the screw that attaches the hopper to the grinder (See the illustration) until the hopper is released.

Remove the hopper from the grinder, empty any remaining coffee and clean it with soap and a cloth soaked in water to remove the residual oils from the coffee beans. Carefully dry and attach the hopper back onto the grinder, reinserting the screw that holds it in place.

8.1.- Outer cleaning of the grinder.

Clean with a damp cloth. Do not use detergents, abrasive products, alcohols or solvents. Use a brush to remove the coffee from the recessed areas.

Do not clean the device by spraying it with water.

9.- Maintenance.

In order to ensure the operating efficiency and correct performance of this grinder, it is essential to follow the manufacturer's instructions and to make sure that any maintenance work is performed by qualified personnel.

A schedule of periodic technical inspections is recommended to ensure the proper performance of this machine. In particular, the grinding burrs must be periodically checked (at least once a year) and replaced if worn out; otherwise, the ground coffee will not have the desired quality.

10.- CE Declaration of Conformity.

THE UNDERSIGNED:

MARKIBAR INNOVACION S.L.L.

Pol. Ind. Noain-Esquiroz. c/G n.24

31191 ESQUIROZ (Navarra) SPAIN

HEREBY DECLARES UNDER HIS/HER OWN RESPONSIBILITY AS THE MANUFACTURER THAT THE PRODUCT: AG2 GRINDER

THE SUBJECT OF THIS DECLARATION, COMPLIES WITH DIRECTIVES:

Electrical safety:

UNE-EN 60335-1

UNE-EN 60335-2-64

Electromagnetic compatibility:

UNE-EN 55014; UNE-EN 55014-1

UNE-EN 61000-3-2

UNE-EN 61000-3-3

UNE-EN 55014-2

THIS DECLARATION IS ISSUED IN COMPLIANCE WITH COUNCIL DIRECTIVE 93/68/CEE OF 22 JULY 1993, WHICH AMENDS DIRECTIVES: 73/23/CEE (ELECTRICAL MATERIAL DESIGNED FOR USE WITHIN CERTAIN VOLTAGE LIMITS), AND 89/336/CEE (ELECTROMAGNETIC COMPATIBILITY). THE PRODUCT ALSO COMPLIES WITH EUROPEAN DIRECTIVES 2002/95/CE (RoHS) and 2002/96/CE (WEEE).

JOSE ANGEL MARKOTEGI GOÑI

Legal representative.

11.- Warranty conditions

- This grinder has a 1-year warranty period, valid from the date of purchase.
- The Warranty covers any defects due to the malfunctioning of original materials or defective assembly. Equipment will be repaired or replaced free of charge, except for transport or shipping costs. For parts to be shipped under warranty, faulty parts must be previously sent to our workshop using a prepaid shipping method, along with a copy of this warranty certificate which includes the machine's serial number. The customer is responsible for shipping charges. Parts must be carefully packaged to avoid damage during the shipping.
- Only authorized personnel may access inside grinder parts.
- This warranty does not cover any damage due to: inappropriate use, inadequate maintenance, the lack of maintenance, the use of the device for any purpose other than that for which it is intended, improper installation, incorrect voltage, falls or normal wear and tear.
- For warranty maintenance, only original replacement parts may be used.

- The manufacturer is not liable for any consequential or secondary damages in any case.
- The Warranty does not cover any damages arising from repairs performed by unauthorized personnel.

The following information is permanently printed on your grinder's rating plate:

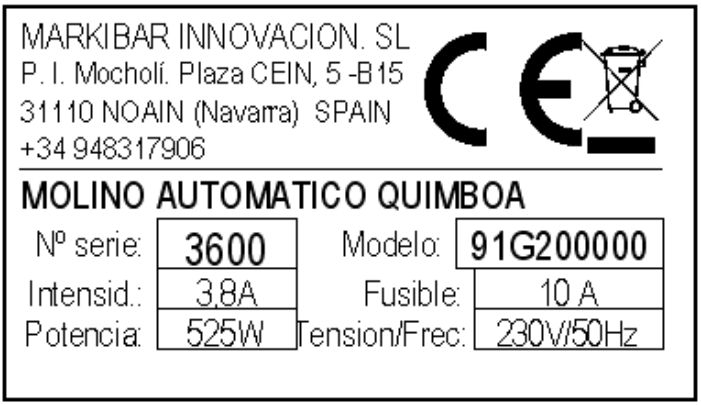
MARKIBAR INNOVACION. SL
P. I. Mocholí. Plaza CEIN, 5 -B15
31110 NOAIN (Navarra) SPAIN
+34 948317906

MOLINO AUTOMATICO QUIMBOA

Nº serie:	3600	Modelo:	91G200000
Intensid.:	3,8A	Fusible:	10 A
Potencia:	525W	Tension/Frec:	230V/50Hz

12.- Appendix I: Filter-holder identification.

(Only for QUIMBOA CLASS A model)

As explained in section 5.3.3, the grinder has several filter-holder identification systems, which can be set by your Service Technicians. The most useful among them is the Filter-holder Detection system. Using this patented system the grinder distinguishes between a filter-holder for two cups of coffee and filter-holders for one cup, without any action on the part of the operator.

A special tag or identifier (provided with the grinder) must be fixed to the 2-cup filter-holder: the grinder senses the presence of this device (and provides the dose for two cups of coffee) and filter-holder without tag (for which it provides the dose for one cups of coffee), with no need for any action on the part of the operator.

To install the identifier proceed as follows:

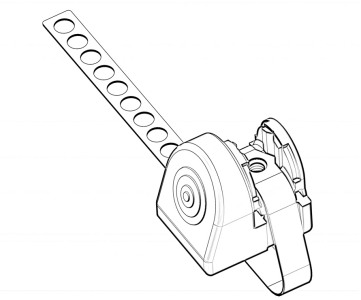

1.- Two magnetic tags are supplied with each A-class grinder, to be fixed to the 2 cups filter-holder.

2.- Place the tag as shown in the image below, the side at an angle facing towards the grinder. (See detailed installation instructions, supplied with the tags).

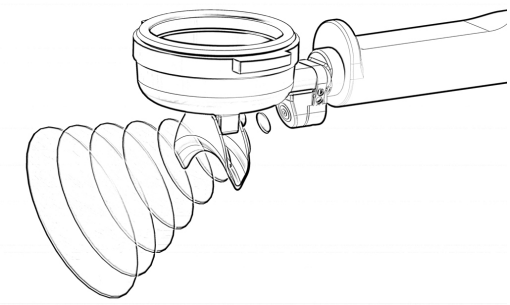

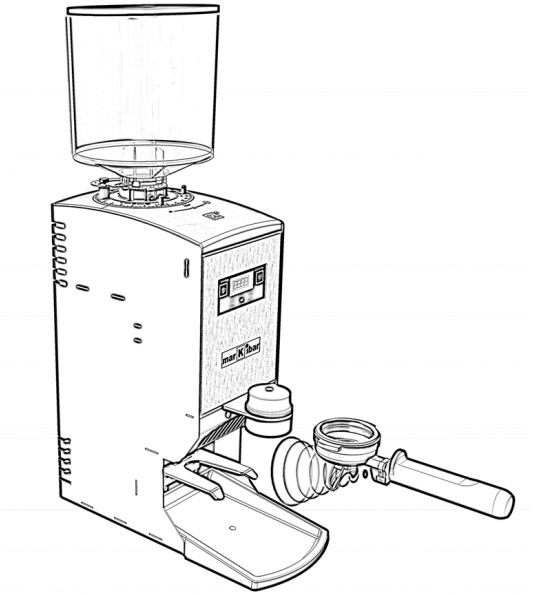

3.- A-class grinders are already configured to detect the presence of the tag. The display shows a horizontal line. If not, ask your Service Technician to program the grinder in MAG mode.

When the grinder detects the presence of the Tag supplies two coffees, otherwise one coffee dose.

4.- Use and clean the filter-holder as usually, the materials of the identifier are highly resistant to water and detergents.

27G200060 MK QUIMBOA INSTRUCTION MANUAL. V1.2